Each corner is a curve.

With Quaturis S, GRASS now offers a comfortable movement solution for standard base corner cabinets for the first time

With Quaturis S, a special swivel mechanism ensures that the ergonomically shaped shelves swing almost completely out of the corner cabinet, offering optimum access to the entire storage area. The fact that the lowest shelf automatically starts moving when the door is opened is not just pretty to watch, also brings all the stored items into view. The shelf can now be loaded and unloaded with great ease. In addition, the closing mechanism is particularly convenient because all the shelves retract back into the cabinet at a touch.

Naturally, gently damped by Soft-close.

QUATURIS CORNER CABINET SYSTEMS

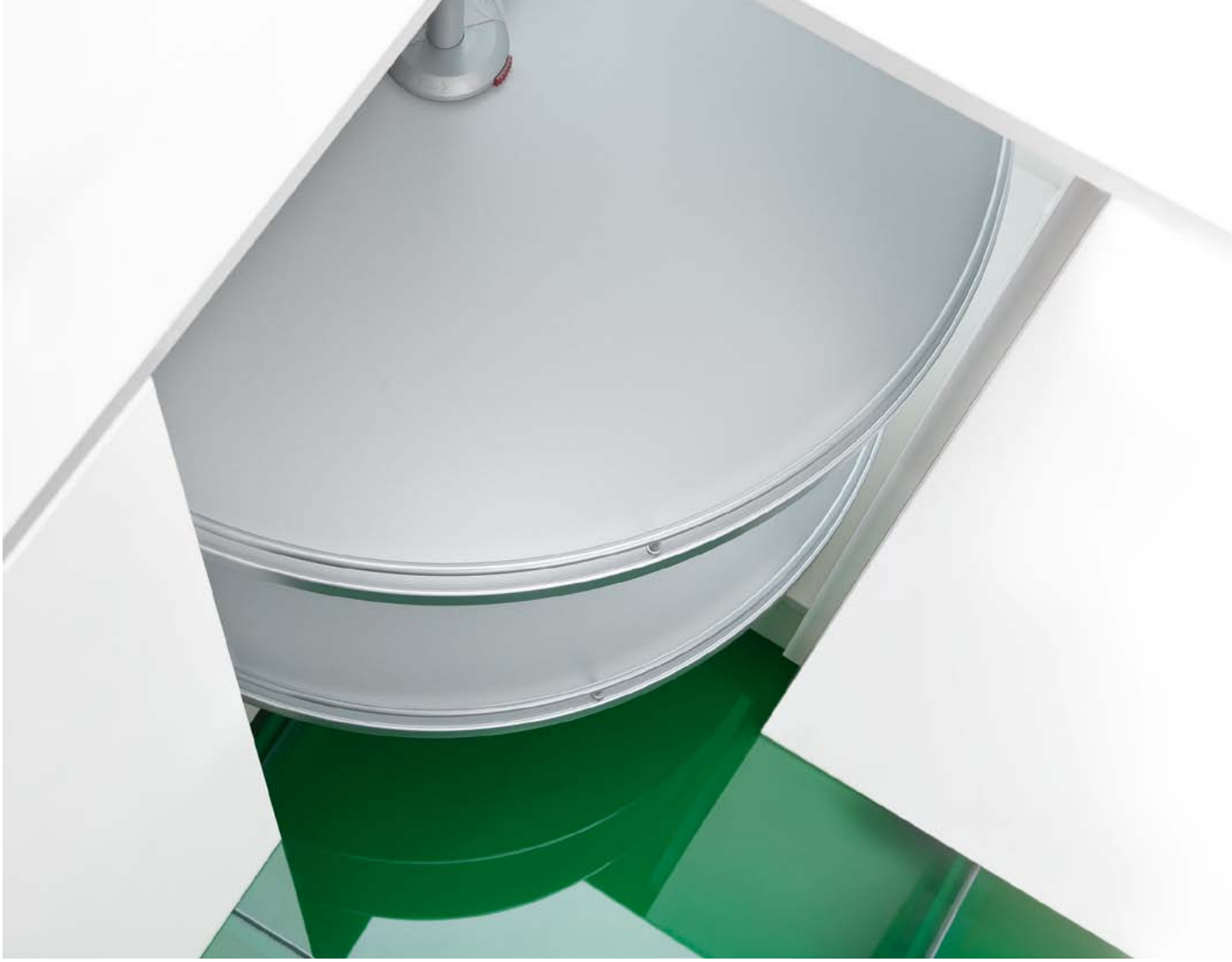

Intelligent corner cabinet solutions for more storage space. Ergonomic, versatile and functional.

The right corner cabinet system turns a dead corner into the perfect storage space.

In times past you had to get down on your knees to reach the contents of base corner cabinets. With our Quaturis systems, that has all changed. Quaturis corner cabinet solutions always turn and swivel the stored items into the ergonomically optimum position so that pots and pans are accessible at the front of the base unit.

Making optimum use of storage space is one of the greatest challenges in modern furniture design. Particularly so when it comes to perfect organisation in the kitchen. And what nobody realises: corner areas hold the greatest potential.

QUATURIS CORNER CABINET SYSTEMS

With Quaturis we are squaring the circle. This is not advanced mathematics, but a fundamental principle for comfortable corner cabinet systems.

Innovation means being ahead of the times. With Quaturis, GRASS offers today what will be in demand tomorrow: functional and, above all, comfortable corner cabinet solutions for the most exacting demands. The product range comprises numerous corner solutions with semi-circular and circular shelves in wood or plastic. All components are perfectly matched and can be individually combined to meet the respective requirement. Furthermore, the closing process is particularly convenient because the Soft-close damping system gently slows the movement of the front and pulls it to the fully closed position.

These special characteristics make Quaturis a highly convenient functional system for the modern kitchen.

QUATURIS CORNER CABINET SYSTEMS

Each corner is a curve. Corner cabinet systems by GRASS with maximum variability and convenience.

QUALITY CERTIFICATE
FOR QUATURIS 75

LGA

Quaturis S – The convenient movement system for standard corner cabinets.

The special swivel mechanism ensures that the ergonomically shaped shelves swing almost completely out of the corner cabinet, offering optimum access to the entire storage area.
The fact that the lowest shelf automatically starts moving when the door is opened is not just pretty to watch, it also brings all the stored items into view. The shelf can now be loaded and unloaded with great ease. In addition, the closing mechanism is particularly convenient because all the shelves retract back into the cabinet when the door is closed.

Quaturis 75 – Functional and variable corner cabinet solutions for the discerning.

Quaturis 75 makes it easy for everybody. Doors close gently and elegantly with the unique Quaturis 75 closing damper, which can be adjusted for the weight of the door and the weight of shelves and stored items. Even with fully loaded shelves, optimum functionality is guaranteed. Furthermore, with its adjustable telescopic tube, the Quaturis 75 is suitable for all common cabinet and worktop heights. Quaturis 75 is the basic fitting for both 80 cm and 90 cm wide corner cabinets. It is also suitable for a wide range of door openings and fits with all common shelves.

CORNER CABINET SYSTEMS

Intelligent corner cabinet solutions for more storage space.
Efficient. Adjustable. Functional.

	Product description		Page
	Quaturis S corner cabinet solutions for standard base cabinets • Premium functional fitting for standard corner cabinets • For cabinet widths of 900, 1000 and 1200 mm • Suitable from 490 mm internal depth • Also suitable for handle-free kitchen furniture	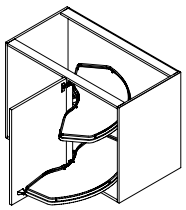	746
	Quaturis 75 for 90° corner cabinet solutions (with wooden shelves) • Pie-cut corner cabinet fitting for 90° corner cabinet solutions • Individual vertical adjustment of shelves for different cabinet heights • Uniform door application with optimum stability for standard and frame doors • Three-dimensional door reveal adjustment (height, sides, depth)	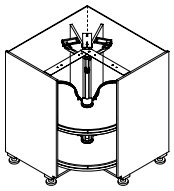	750
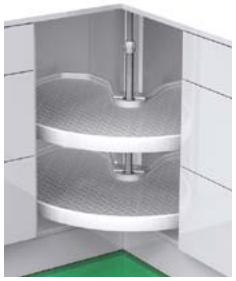	**Quaturis 75 for 90° corner cabinet solutions (with plastic shelves)** • Pie-cut corner cabinet fitting for 90° corner cabinet solutions • Individual vertical adjustment of shelves for different cabinet heights • Uniform door application with optimum stability for standard and frame doors • Three-dimensional door reveal adjustment (height, sides, depth)	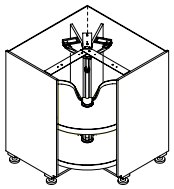	752

	Technical information Quaturis S	748
	Technical information Quaturis 75	754
	Installation technology	757

6

QUATURIS S

Corner cabinet solutions for standard base cabinets

- Premium functional fitting for standard corner cabinets; widths 900 mm, 1000 mm and 1200 mm
- Suitable from 490 mm internal depth
- Also suitable for handle-free kitchen furniture
- Shelves swing almost completely out of the corner cabinet
- Excellent access to the entire storage area
- Wooden shelves can carry 20 kg each
- Continuous vertical adjustment of shelves
- Quick tool-free installation of shelves

Note:
Available 2012

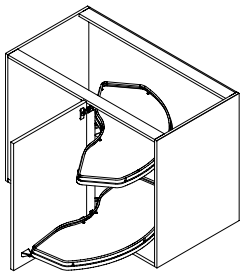

ORDER INFORMATION

Quaturis S corner cabinet fitting set

KB	TAM	Set	Application	Item No.
900	450	1	Left	**F154**145**196**
		4	Right	**F154**145**199**
1000	500	2	Left	**F154**145**197**
		5	Right	**F154**145**200**
1200	600	3	Left	**F154**145**198**
		6	Right	**F154**145**201**

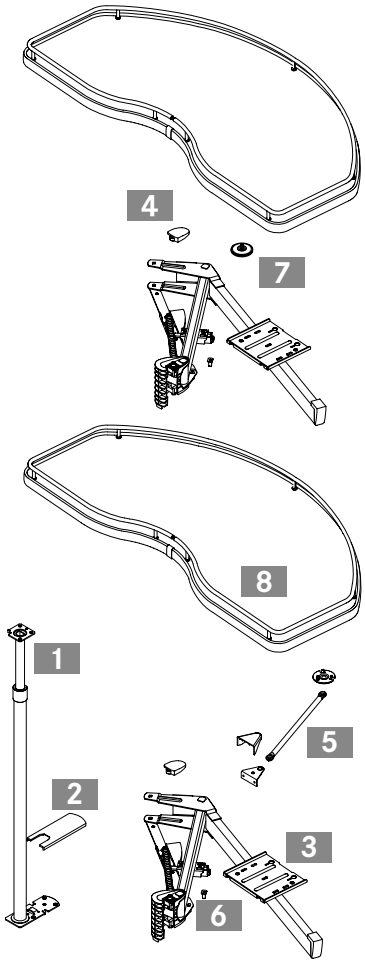

1 set includes:

1. Telescopic tube and screw-on plates top and bottom (1x)
2. Cover cap for screw-on plate, bottom (1x)
3. Swing mechanism with clamping elements, self-retracting function and damper (2x)
4. Cover caps for clamping element (2x)
5. Connecting arm complete with screw-on elements and cover cap for screw-on bracket (1x)
6. Opening angle reduction clips (2x)
7. Guide disc including running socket with pre-fitted Euro screw (1x)
8. Shelf (2x)

Installation instructions and drilling templates (1x)

6

Tiomos 95	98	Nexis Click-on 05	216	Technical information	748
Nexis Impresso 05	172	Nexis Slide-on 05	280	Installation technology	757

Packaging units are not covered in this catalogue; please enquire with your supplier

INSTALLATION INFORMATION

Space requirement (drawing shows l/h application)

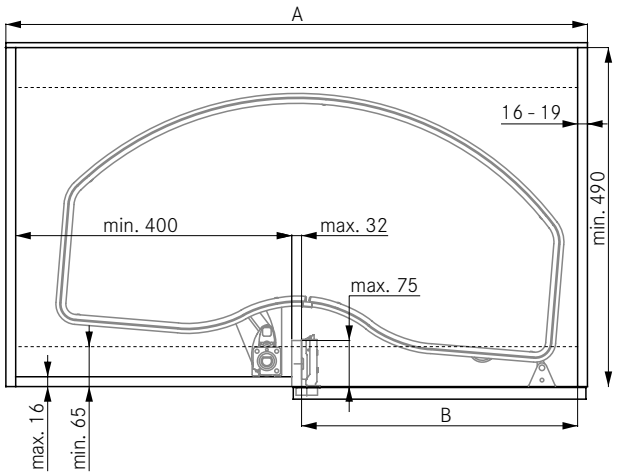

TAM	A	B
450	min. 900	411-418
500	min. 1000	461-468
600	min. 1200	561-568

Door installation (drawing shows l/h application)

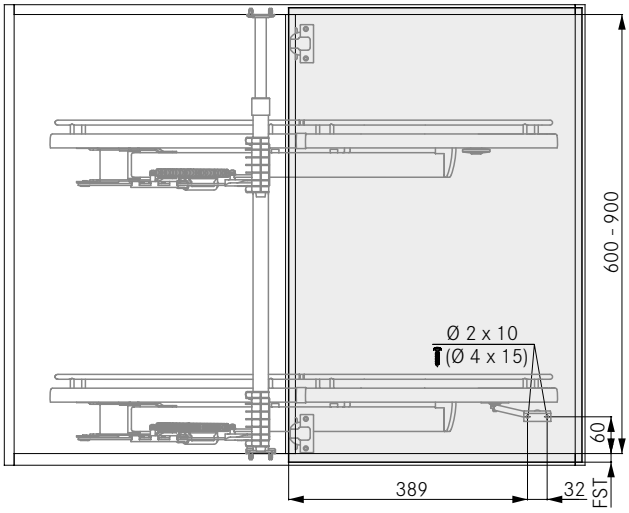

Top fixing of cross bar (drawing shows l/h application)

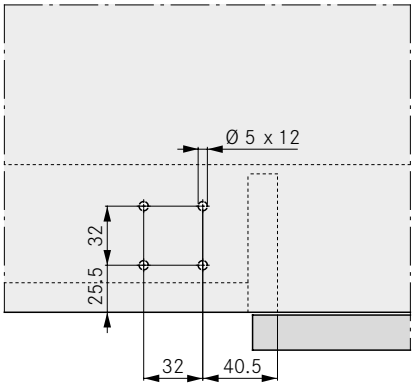

Fixing to cabinet base (drawing shows l/h application)

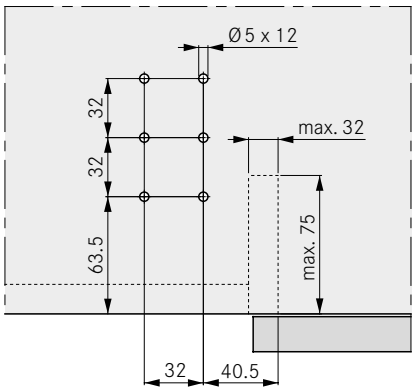

Important! Drill holes at top and in cabinet base before assembly! Fixing with Euro collar screws Ø 6.3 x 10.5

LEGEND

FST	Front overlay
KB	Cabinet width
TAM	Door cut-out dimension

MOVEMENT SEQUENCE

Shelves

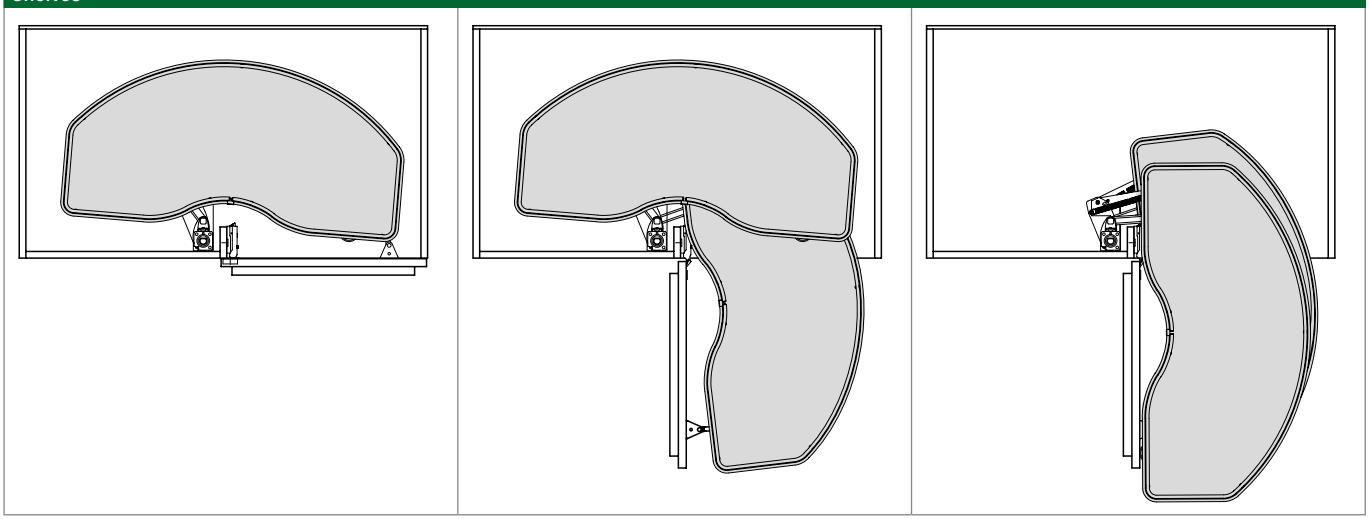

ADJUSTMENTS

Height adjustment

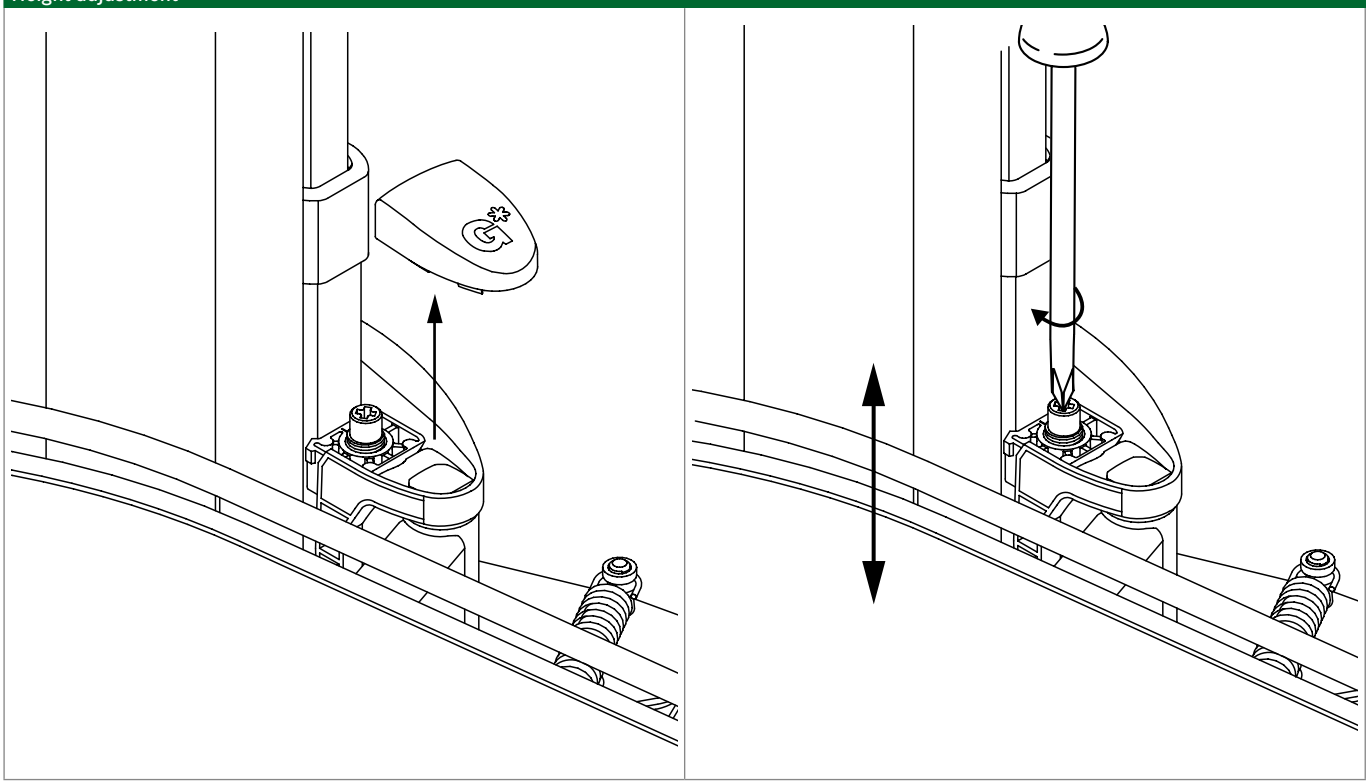

Quaturis S	746

ADJUSTMENTS

Adjusting the shelf self-retracting damper

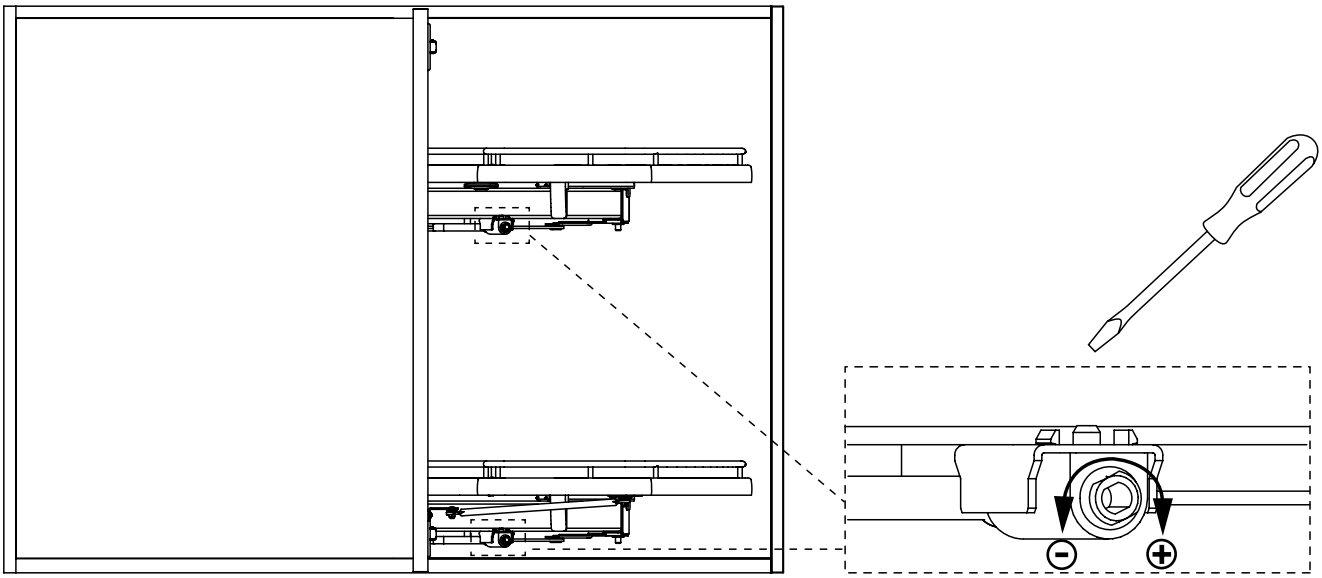

Adjusting the opening angle to 90°

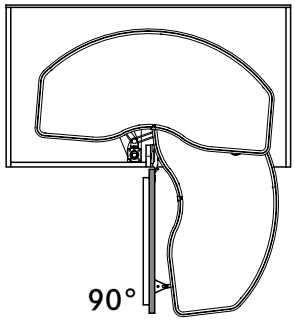

Adjusting the opening angle to 85°

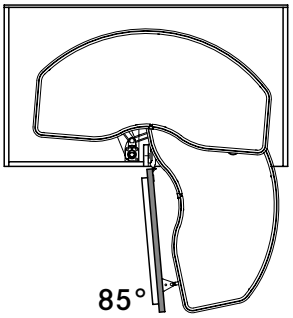

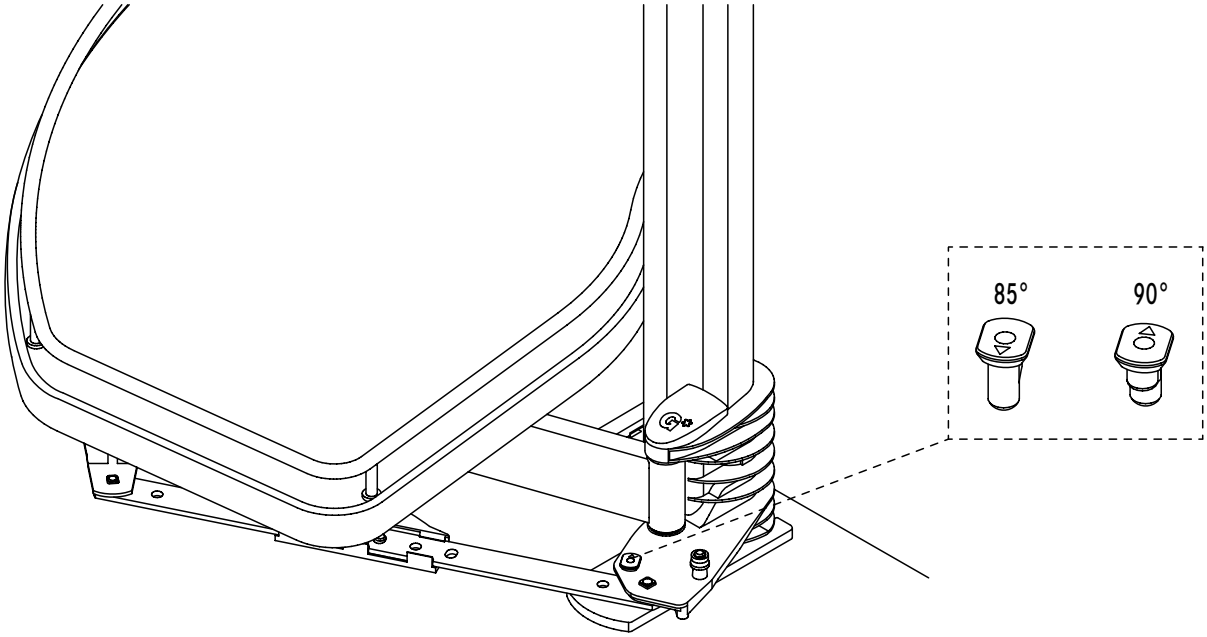

6

QUATURIS 75

For 90° corner cabinet solutions (with wooden shelves)

- Individual vertical adjustment of wooden shelves for different cabinet heights
- Uniform door application with optimum stability for standard and frame doors
- Perfect reveal alignment through three-dimensional door adjustment (height, sides, depth)
- Integrated door lowering mechanism allows small reveals between door and worktop
- Outstanding movement and closing process with integrated, individually adjustable closing damper
- Easy straightforward installation
- Maintenance-free
- ¾ circle wooden shelves
- With chrome railing
- Chipboard 16 mm, grey
- Anti-slip surface

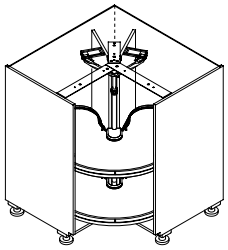

ORDER INFORMATION

Quaturis 75 corner cabinet pie-cut fitting set with wooden shelves

KB	LHK	TAM	Set	LTK	Item No.
800	690 - 910	240	1	500	**F154**145**171**
		250	2	510	**F154**145**172**
900		340	3	515	**F154**145**173**
		350	4	525	**F154**145**174**

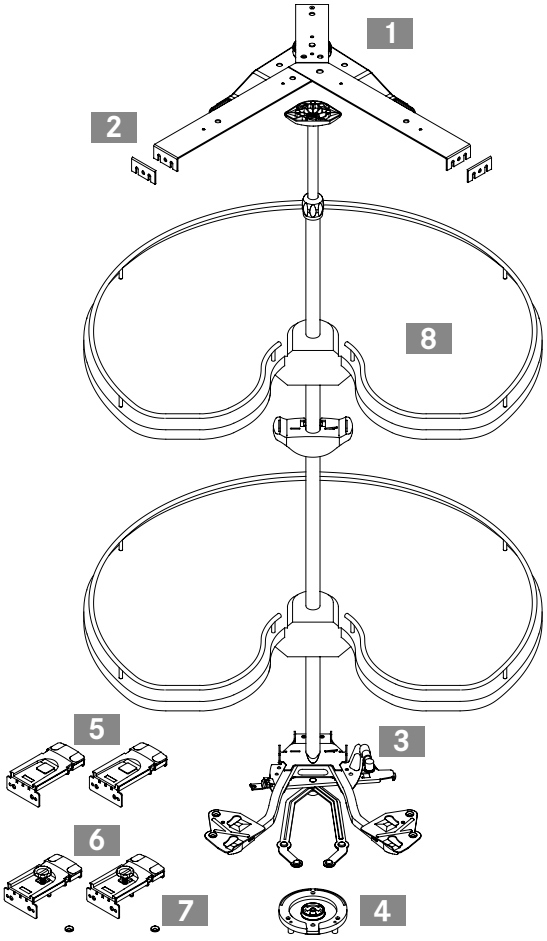

1 set includes:

1 Bearing cross with top door bearing fitted at factory (1x)
2 Spacer plates for 16 mm side wall thickness (2x)
3 Base fitting with telescopic tube and shelf bearers (1x)
4 Curve disc (1x)
5 Top door brackets (2x)
6 Bottom door brackets (2x)
7 Transport protection caps (2x)
8 Wooden shelf with chrome railing and anti-slip surface (2 x)
Installation instructions and drilling templates (1x)

Technical information	754
Installation technology	757

Packaging units are not covered in this catalogue; please enquire with your supplier

INSTALLATION INFORMATION

Required space

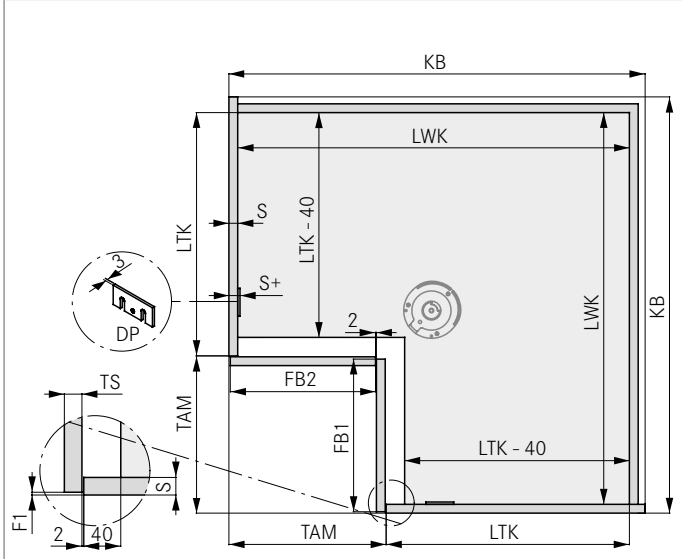

Door installation

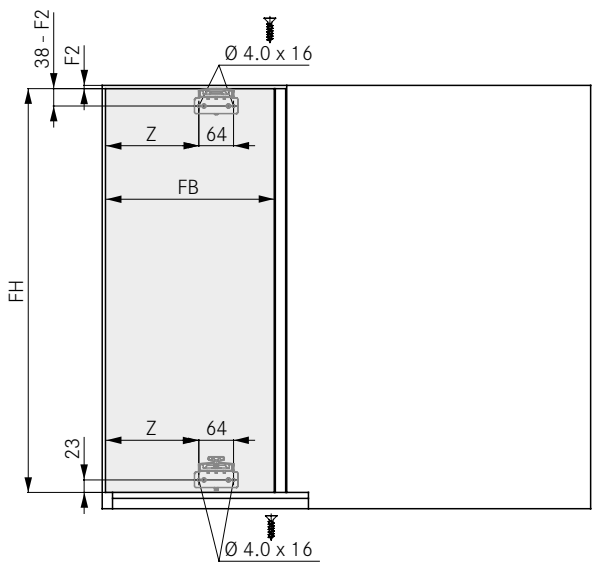

Set	KB	S	TAM	LTK	LWK	TS	F1	F2	FB1	FB2	KH	Z
Set 1	800	16	240	500	740-S	16–22	2–4	2–7	230	236-TS-F1	FH+F2+KUB+11	63
		19										
Set 2		16	250	510	760-S				240	246-TS-F1		73
		19										
Set 3	900	16	340	515	855-S				330	336-TS-F1		172
		19										
Set 4		16	350	525	875-S				340	346-TS-F1		182
		19										

Cabinet base fixing

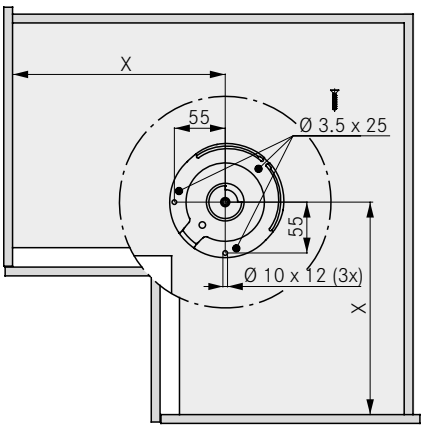

	Set 1		Set 2		Set 3		Set 4	
S	16	19	16	19	16	19	16	19
X	363	360	373	370	422	419	432	429

Side fixing

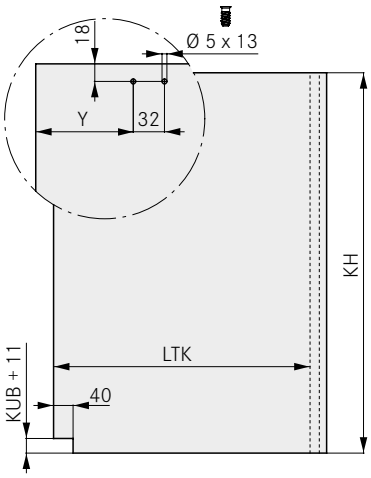

	Set 1	Set 2	Set 3	Set 4
Y	100	90	100	90

LEGEND

F	Reveal	KH	Cabinet height	LWK	Inside cabinet width
FB	Width of front	KUB	Cabinet base	S	Cabinet side wall
FH	Height of front	LHK	Inside cabinet height	TAM	Door cut-out dimension
KB	Cabinet width	LTK	Inside cabinet depth	TS	Door thickness

6

QUATURIS 75

For 90° corner cabinet solutions (with plastic shelves)

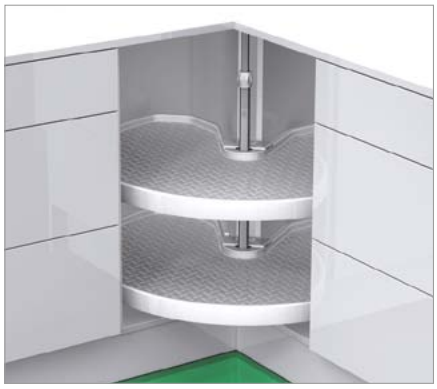

- Individual vertical adjustment of plastic shelves for different cabinet heights
- Uniform door application with optimum stability for standard and frame doors
- Perfect reveal alignment through three-dimensional door adjustment (height, sides, depth)
- Integrated door lowering mechanism allows small reveals between door and worktop
- Outstanding movement and closing process with integrated, individually adjustable closing damper
- Easy straightforward installation
- Maintenance-free
- ¾ circle plastic shelves
- Made of plastic, grey RAL 7004
- Anti-static surface
- Strong ribbed design for extra stability

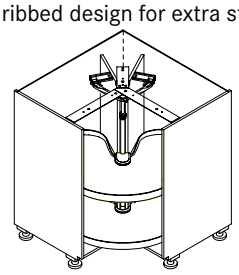

ORDER INFORMATION

Quaturis 75 corner cabinet pie-cut fitting set with plastic shelves

KB	LHK	TAM	Set	LTK	Item No.
800	690 - 910	240	5	500	**F154**145**175**
		250	6	510	**F154**145**176**
900		340	7	515	**F154**145**177**
		350	8	525	**F154**145**178**

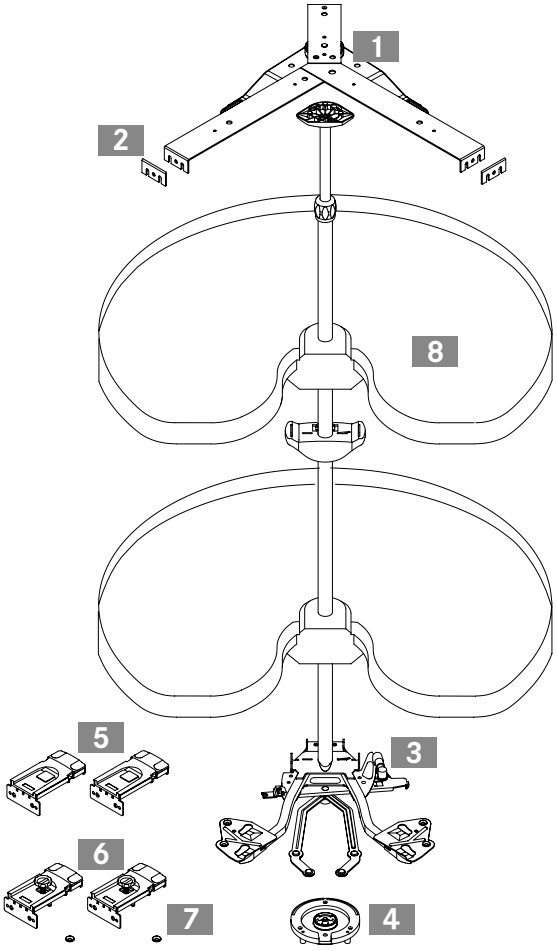

6

1 set includes:

1 Bearing cross with top door bearing fitted at factory (1x)
2 Spacer plates for 16 mm side wall thickness (2x)
3 Base fitting with telescopic tube and shelf bearers (1x)
4 Curve disc (1x)
5 Top door brackets (2x)
6 Bottom door brackets (2x)
7 Transport protection caps (2x)
8 Plastic shelves, grey (2 x)
Installation instructions and drilling templates (1x)

Technical information	754
Installation technology	757

Packaging units are not covered in this catalogue; please enquire with your supplier

INSTALLATION INFORMATION

Required space

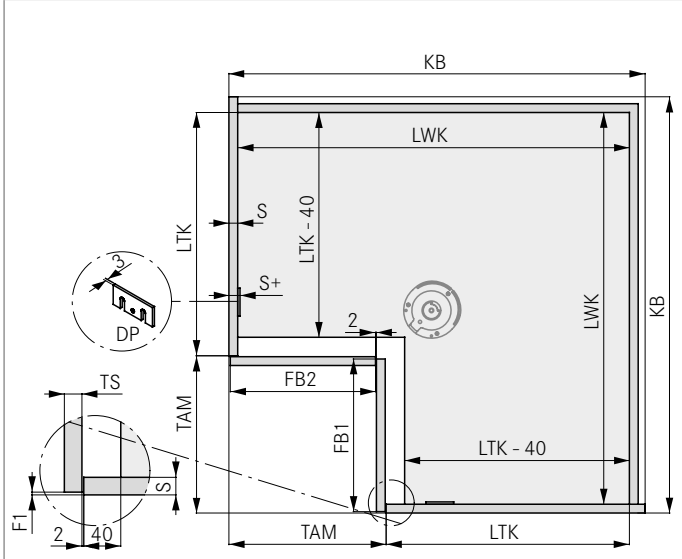

Door installation

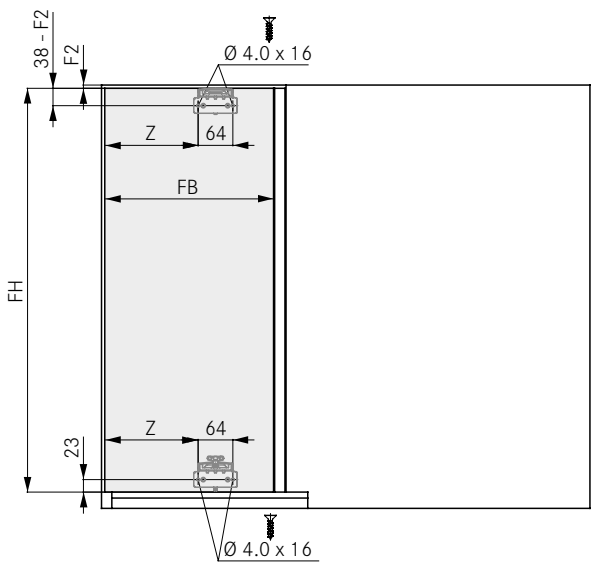

Set	KB	S	TAM	LTK	LWK	TS	F1	F2	FB1	FB2	KH	z
Set 5	800	16	240	500	740-S	16–22	2–4	2–7	230	236-TS-F1	FH+F2+KUB+11	63
		19										
Set 6		16	250	510	760-S				240	246-TS-F1		73
		19										
Set 7	900	16	340	515	855-S				330	336-TS-F1		172
		19										
Set 8		16	350	525	875-S				340	346-TS-F1		182
		19										

Cabinet base fixing

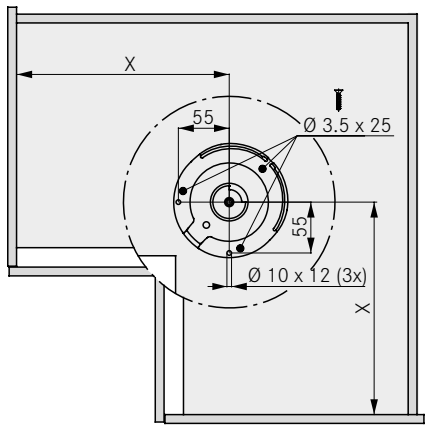

	Set 5		Set 6		Set 7		Set 8	
S	16	19	16	19	16	19	16	19
X	363	360	373	370	422	419	432	429

Side fixing

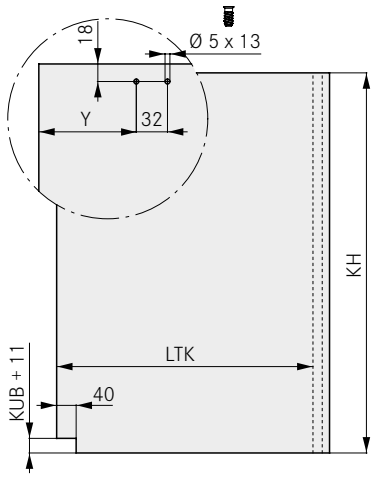

	Set 5	Set 6	Set 7	Set 8
Y	100	90	100	90

LEGEND

F	Reveal	KH	Cabinet height	LWK	Inside cabinet width
FB	Width of front	KUB	Cabinet base	S	Cabinet side wall
FH	Height of front	LHK	Inside cabinet height	TAM	Door cut-out dimension
KB	Cabinet width	LTK	Inside cabinet depth	TS	Door thickness

INSTALLATION INSTRUCTIONS

Inserting the shelves	Movement sequence		
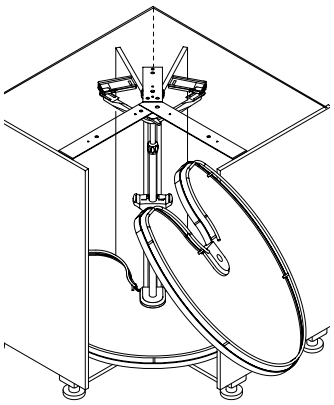	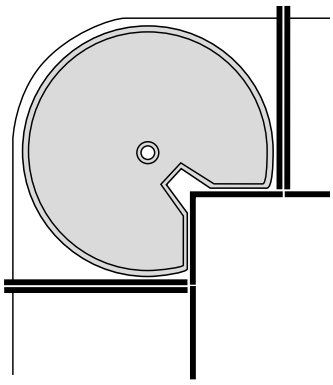	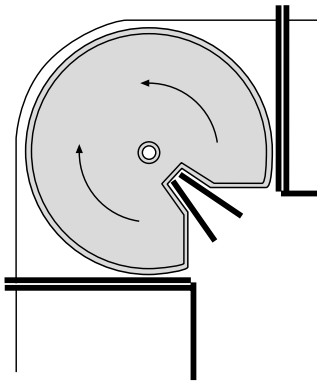	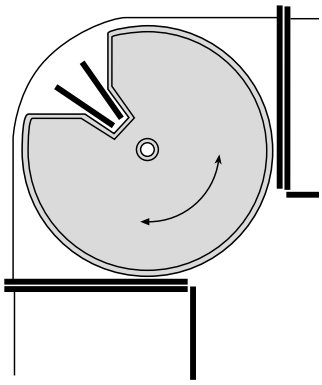

ADJUSTMENTS

Side adjustment SV	Depth adjustment TV	Height adjustment HV	Shelf height adjustment HVT
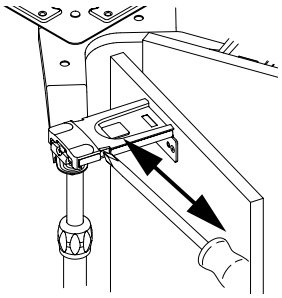	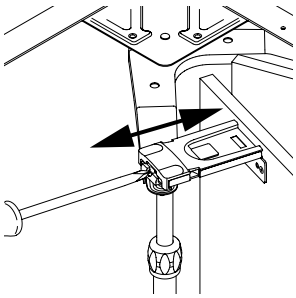	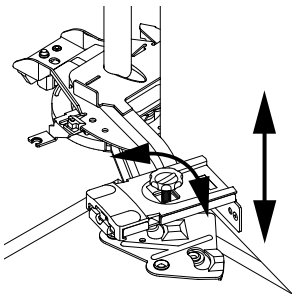	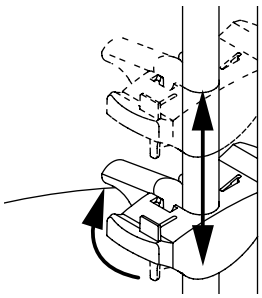

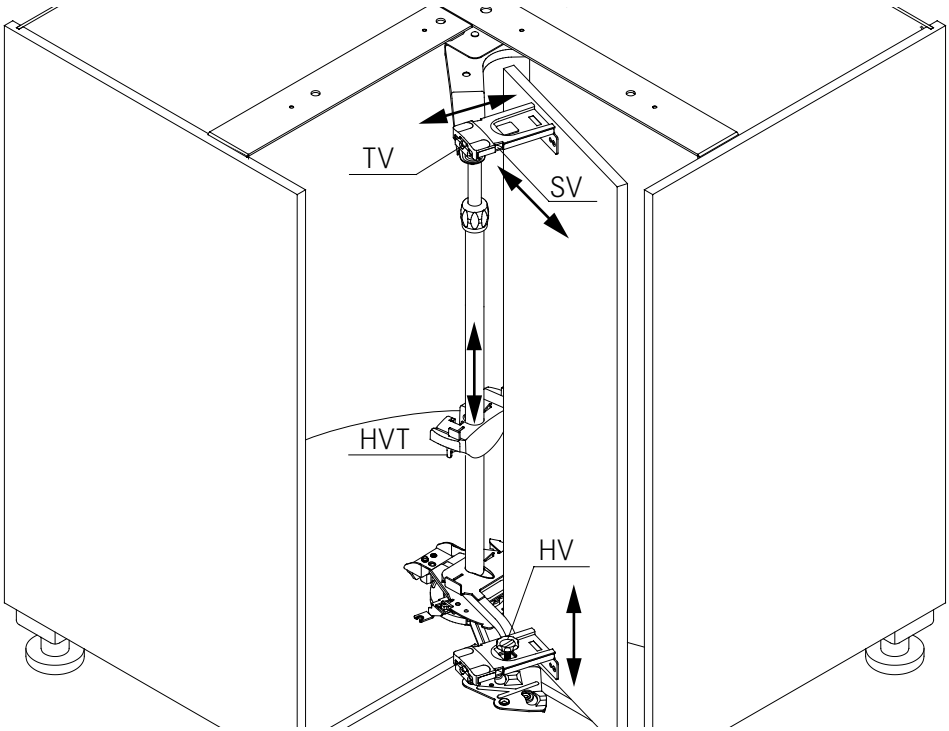

Quaturis 75 (with wooden shelves)	750
Quaturis 75 (with plastic shelves)	752

Packaging units are not covered in this catalogue; please enquire with your supplier

ADJUSTMENTS

Adjusting damper and closing speed

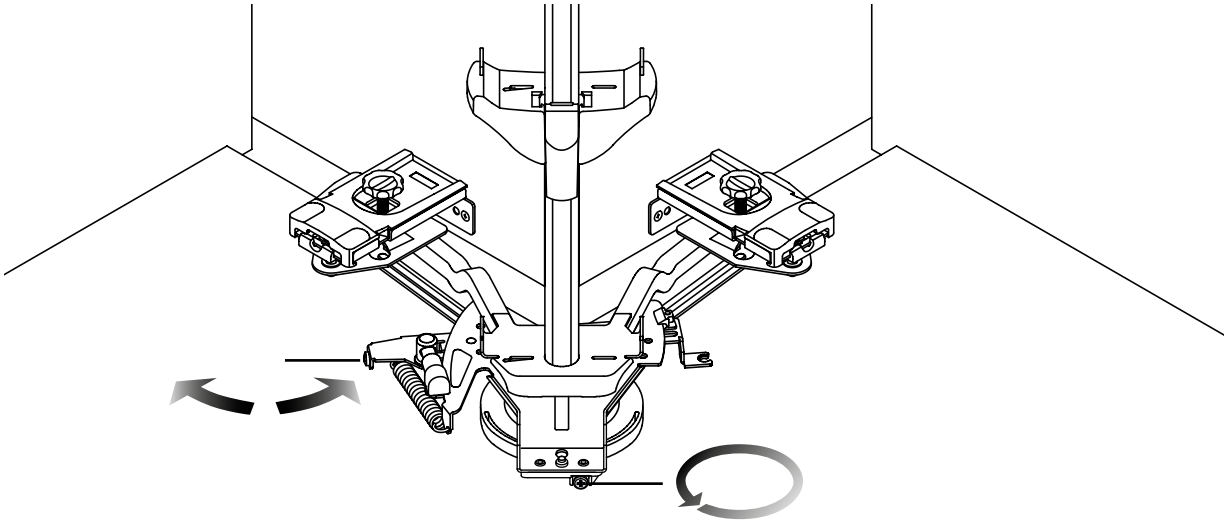

Damping the turning movement

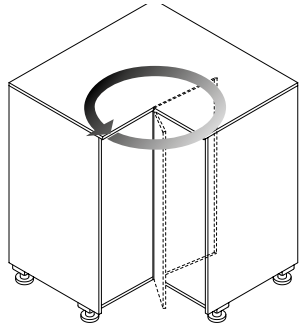

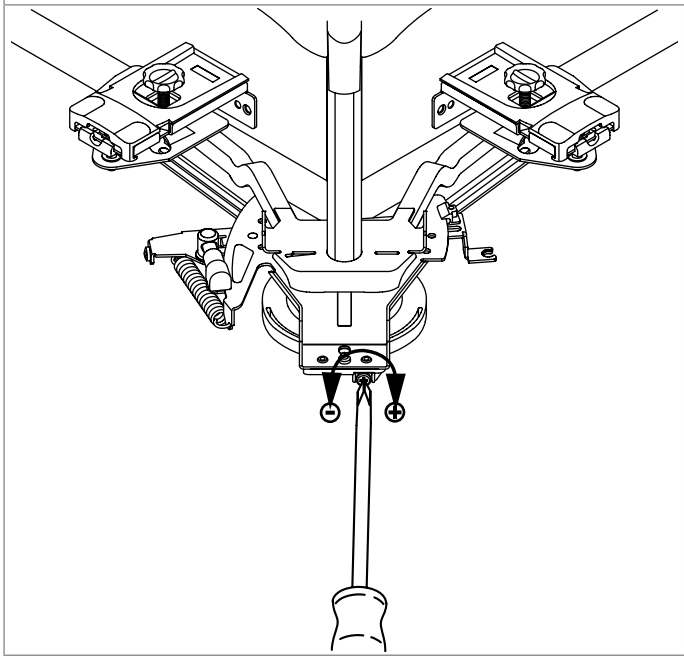

Closing speed of door

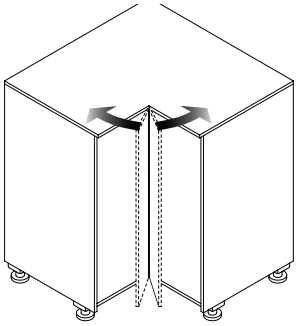

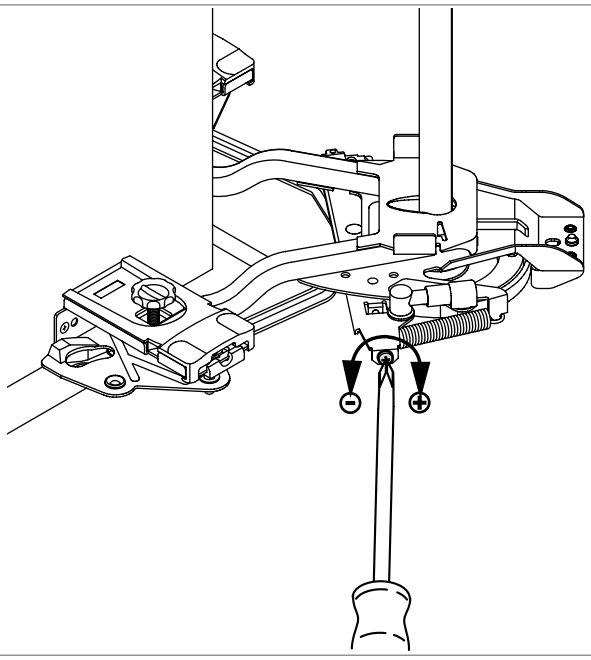

LEGEND

HV	Height adjustment
HVT	Shelf height adjustment
SV	Side adjustment
TV	Depth adjustment